Input/Output

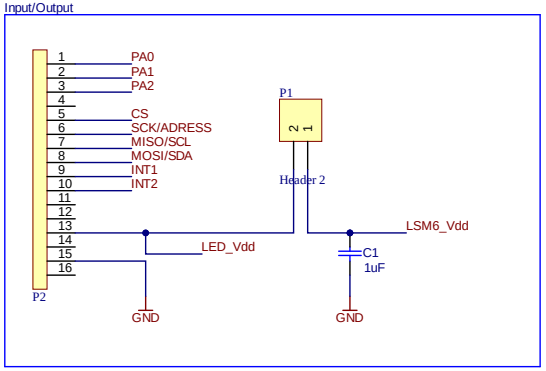

SPI/I2C selection

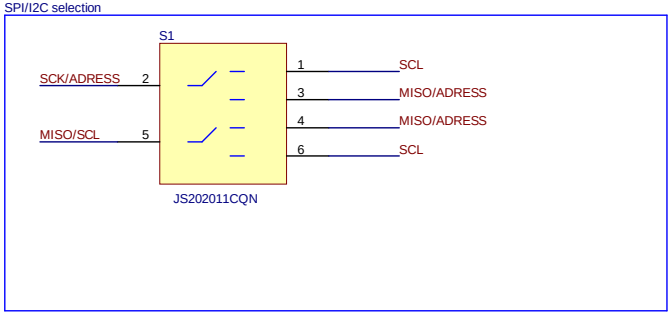

Gyroscope/Acceleration

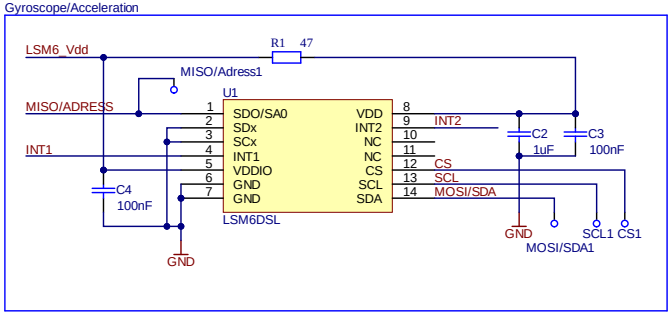

LEDs

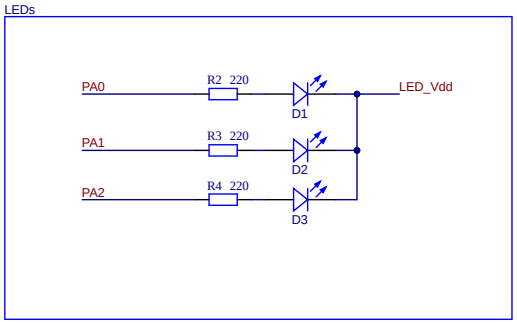

Rev	Date	Sign	Release Notes
1.0	25.07.2018	Reiu	

Zurich University of Applied Sciences
School of Engineering
Zurich University of Applied Sciences
InES Institute of Embedded Systems
Technikumstrasse 19
8401 Winterthur
Switzerland

© InES
This document is property of InES - Institute of Embedded Systems
No copying or distribution without prior written permission of InES

Title
MC1_Accelerometer

Size	Document Number	Revision
A3	1	1

Sheet 1 of 1 | Print date: 29.07.2020 | Drawn by: Reiu

File: C:\Daten\SVN Projekte\MC1\praktika\P_05_P_06_motion_sensor\Hardware\MC1_Accelerometer\Do